REVISIONS				
ZONE	REV.	DESCRIPTION	DATE	APPROVED

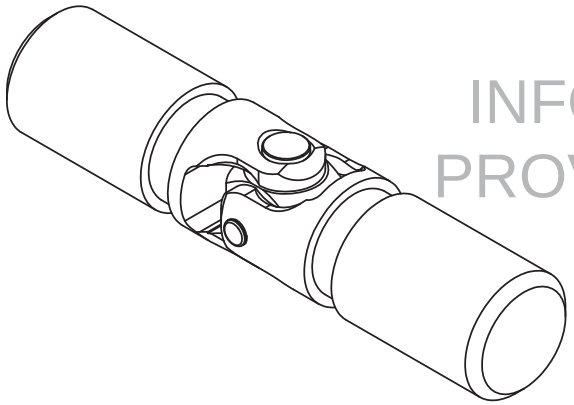

INFORMATION IN THIS DRAWING
PROVIDED FOR REFERENCE ONLY

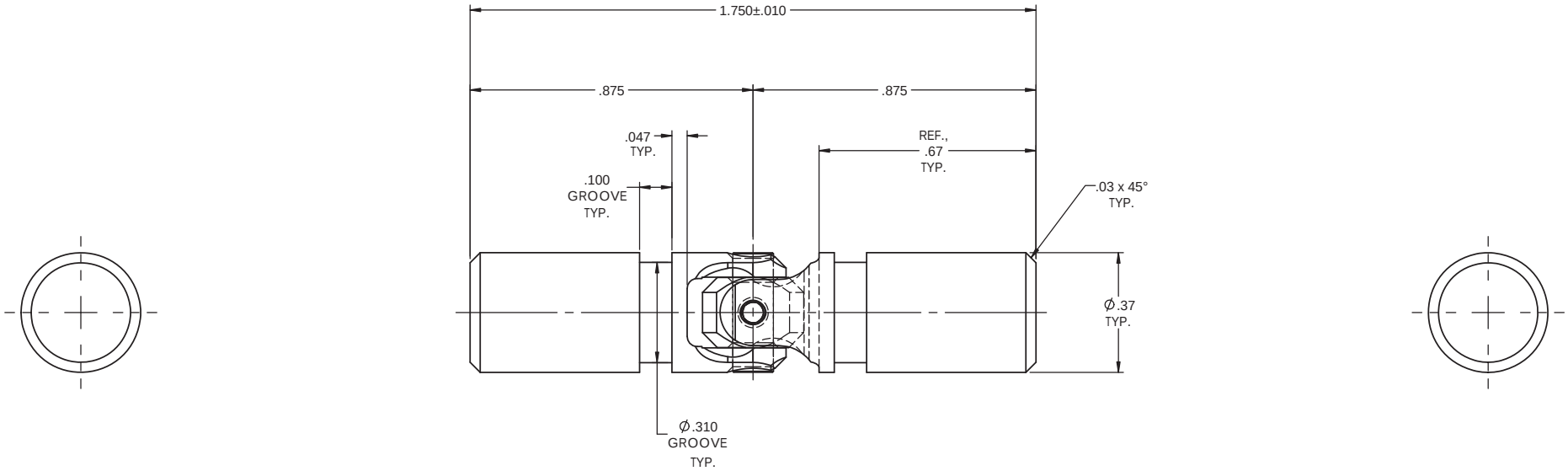

NOTE(s), UNLESS OTHERWISE SPECIFIED.

(1) UNIVERSAL JOINT IS MARKED w/ "BELDEN" LOGO, PART NUMBER / DRAWING NUMBER, REVISION LEVEL (IF ANY), DATE OF MANUFACTURE (MO/YR), AND BELDEN JOB NUMBER.

(2) UNIVERSAL JOINT IS LUBRICATED w/ LUBRIPLATE 1200-2, NLGI GRADE 2, AW/EP, LITHIUM GREASE OR EQUIVALENT.

(3) UNIVERSAL JOINT IS CAPABLE OF OPERATING AT ANY ANGLE UP TO AND INCLUDING 45°.

(4) UNIVERSAL JOINT HAS STANDARD GROOVES TO ACCEPT INSTALLATION OF PROTECTIVE COVER (BOOT). BOOT AVAILABLE SEPARATELY. REFER TO BELDEN CATALOG, WEBSITE, OR CONTACT BELDEN SALES.

(5) REFER TO BELDEN CATALOG, WEBSITE, OR CONTACT BELDEN SALES FOR TORQUE CAPACITY.

(6) THIS DRAWING REPRESENTS A STANDARD BELDEN ITEM. CUSTOM UNIVERSAL JOINTS ARE AVAILABLE UPON REQUEST. PLEASE CONTACT BELDEN SALES.

BELDEN PART NUMBER: UJ-HD375x00

DO NOT SCALE DRAWING

UNLESS OTHERWISE SPECIFIED
CHAMFER ALL HOLES
BREAK ALL SHARP CORNERS
DE-BURR ALL FEATURES
TURNED SURFACES: 63
MILLED SURFACES: 125

PROPRIETARY AND CONFIDENTIAL
THE INFORMATION CONTAINED IN THIS DRAWING IS THE SOLE PROPERTY OF BELDEN INCORPORATED. ANY REPRODUCTION IN PART OR AS A WHOLE WITHOUT THE WRITTEN PERMISSION OF BELDEN INCORPORATED IS PROHIBITED.

STANDARD TOLERANCES, UNLESS OTHERWISE SPECIFIED
DIMENSIONS ARE IN INCHES [mm]
ANGULAR MACHINED: ±1.0°
FRACTIONAL: ±.015"
TWO PLACE DECIMAL: ±.010"
THREE PLACE DECIMAL: ±.005"
FOUR PLACE DECIMAL: ±.0005"
CONCENTRICITY: .0025" T.I.R.
ALL HOLES TO BE LOCATED ON CENTERLINE (℄) WITHIN .005" T.I.R.
INTERPRET GEOMETRIC TOLERANCES I.A.W. ANSI Y14.5M-1982

MATERIAL: ALLOY STEEL
HEAT TREAT: SEE DETAIL DRAWINGS
FINISH: NONE

	NAME	DATE
DRAWN	JP	08JUN12
CHECKED	RNK	08JUN12
ENG APPR.	RNK	08JUN12
MFG APPR.		
Q.A.		

COMMENTS:

Belden Incorporated
www.beldenuniversal.com

TITLE: ASSEMBLY, UNIVERSAL JOINT

SIZE: C | DWG. NO. UJ-HD375x00 | REV

SCALE: 4:1 | WT (Lbs): 0.046 | SHEET 1 OF 2